UA50MC SERIES OIL-PULSE WRENCHES

EXPLODED VIEW

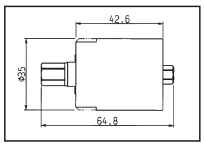

Liner Casing Assembly
Code No. 17C-911-4
(This assembly is made up of parts #45, 46, 47, 48, 49, 50, 51, 52, 53, 54, 55, 56, 57, 58, 59, 60, 61, 62, 63, 64, 65, 66, 67, 68 and 69.)

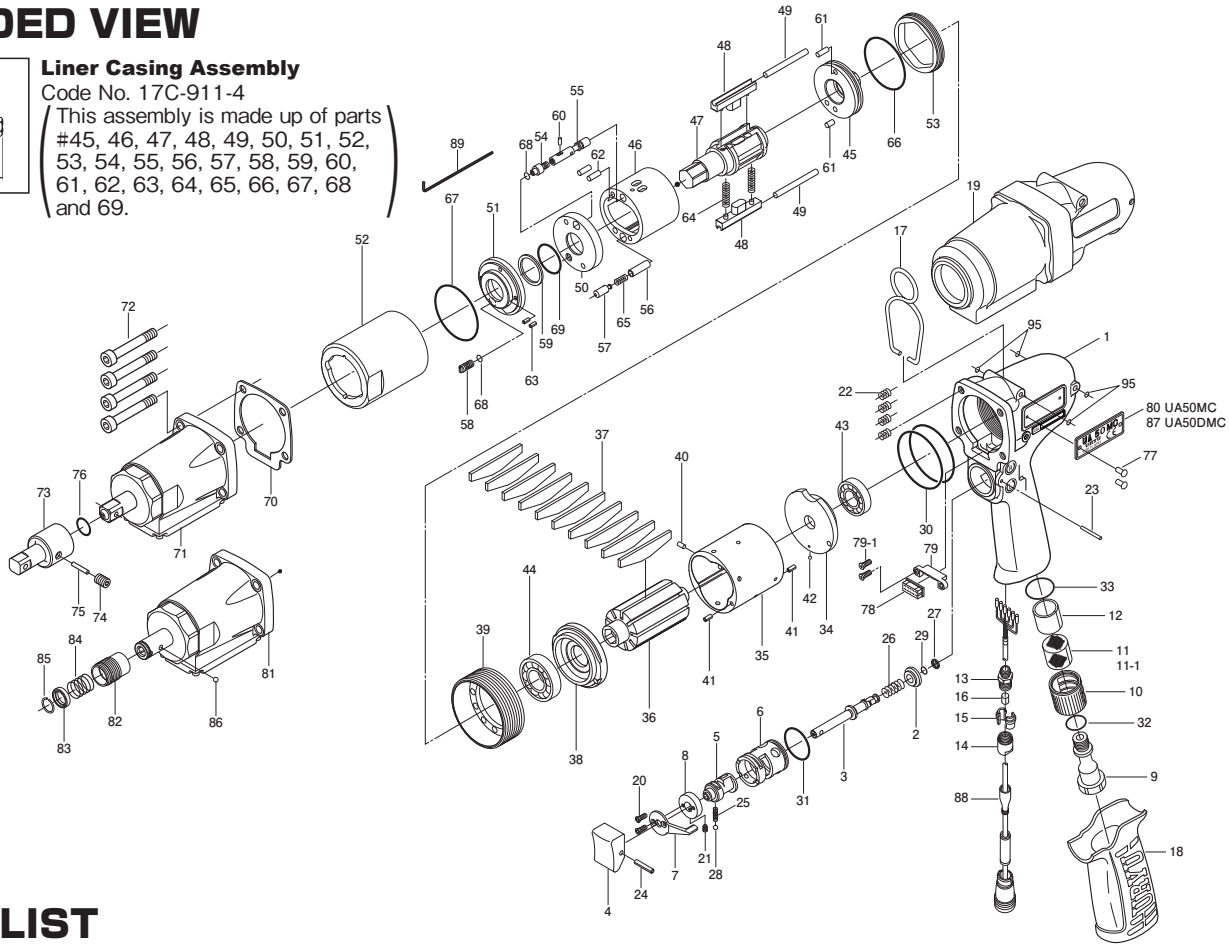

PARTS LIST

Index No.	Code No.	Parts Name	Quantity
Commom Parts			
#01	17C-025-4	Handle	1
#02	147-100-3	Valve	1
#03	147-104-2	Valve Rod	1
#04	147-107-2	Valve Lever	1
#05	851-306-1	Reverse Valve	1
#06	851-359-1	Reverse Valve Bushing	1
#07	173-212-0	Reverse Lever	1
#08	851-307-1	Reverse Valve Spacer	1
#09	147-091-2	Air Inlet Bushing	1
#10	147-780-3	Exhaust Stack	1
#11	147-042-2	Silencer	1
#11-1	17E-042-0	Silencer (either-or)	1
#12	145-835-8	Filter (K-100)	1
#13	851-301-1	Connector	1
#14	851-302-1	Cap	1
#15	851-303-1	Stopper	2
#16	131-395-8	Outer Ring	1
#17	143-790-3	Suspension Ring	1
#18	17D-842-3	Handle Cover	1
#19	131-840-5	Casing Protector	1
#20	948-422-0	Allen Head Screw (M3×5)	2
#21	952-008-0	Allen Head Screw (M3×8)	1
#22	965-011-0	Heli-Sert (M5×1.5D)	4
#23	971-126-0	Pin (2×26)	1
#24	973-014-0	Roll Pin (2×14)	1
#25	976-006-0	Spring (3×5)	1
#26	976-457-0	Spring (7×12)	1
#27	979-405-0	Outer Snap Ring (E2.5)	1
#28	981-002-0	Ball (1/8)	1
#29	990-306-0	O-Ring (APR-569-004)	1
#30	990-337-0	O-Ring (JW1530-27)	2
#31	990-912-0	O-Ring (SNS-14)	1
#32	990-914-0	O-Ring (SNS-16)	1
#33	990-916-0	O-Ring (SNS-18)	1
#34	18B-285-2	Rear Plate	1
#35	17C-286-4	Cylinder	1
#36	17C-287-4	Rotor	1
#37	17C-288-4	Blade	10
#38	18B-289-2	Front Plate	1
#39	131-036-5	Hammer Casing Connector	1
#40	971-102-0	Pin (2×3.8)	1
#41	973-008-0	Roll Pin (2×8)	2
#42	981-045-0	Ball (1.5)	1
#43	982-014-0	Ball Bearing (607)	1
#44	982-902-0	Ball Bearing (6901)	1
#45	17C-901-4	Rear Liner Plate	1
#46	18B-902-2	Liner	1
#47	137-319-4	Anvil	1
#48	145-440-0	Driving Blade	2
#49	145-974-0	Roller (2.5×21)	2
#50	18C-973-8	Liner Casing Spacer	1
#51	145-904-6	Front Liner Plate	1
#52	17C-905-4	Liner Casing	1
#53	145-906-6	Liner Casing Cover	1
#54	145-907-6	Relief Valve Spindle	1
#55	17C-970-4	Relief Valve	1
#56	080-274-6	Pressure Valve Spring Collar	1
#57	17C-276-4	Pressure Valve Body	1
#58	194-742-0	Oil Plug	1
#59	944-212-0	Back-up Ring(12×16×1.5)	1
#60	970-013-0	Pin (H)(1.5×4)	1
#61	970-130-0	Pin (H)(2.45×4.5)	2
#62	970-131-0	Pin (H)(2.45×9.5)	2
#63	973-040-0	Roll Pin (1.5×5)	2
#64	976-791-0	Spring (3.3×21)WPC	2
#65	976-778-0	Spring (3×12.1)	1
#66	990-329-0	O-Ring (JW1530-19)	1
#67	990-605-0	O-Ring (25×1.45)	1
#68	990-900-0	O-Ring (SNS-2)	2
#69	992-020-0	SU Ring (Q12)	1
#70	17D-867-3	Front Casing Packing	1
#71	851-679-1	Sensor Casing Assembly (S04S)	1
#72	945-117-0	Allen Head Bolt (M5×16)	4
#73	904-090-0	Extension Bar (3/8×45)	1
#74	953-104-0	Allen Head Screw (M4×4)	1
#75	971-214-0	Pin (3×14)	1
#76	990-011-0	O-Ring (P-12)	1
#77	930-205-0	Driver Rivet	2
#78	909-918-0	Double-Row Socket	1
#79	911-017-0	Connector Cover	1
#79-1	957-256-0	Cross Head Screw (M2×5)	2
#95	978-003-0	Snap Ring (3.2×0.45)	4
PARTS FOR UA50MC			
#80	17C-924-4	Metal Tag (UA50MC)	1
PARTS FOR UA50DMC			
#81	851-697-1	Sensor Casing Assembly (S04D)	1
#82	011-351-1	Bit Sleeve	1
#83	011-352-1	Bit Spacer	1
#84	976-327-0	Spring (13.5×11)	1
#85	978-117-0	Snap Ring (11.7×1)	1
#86	981-002-0	Ball (1/8)	1
#87	17C-924-2	Metal Tag (UA50DMC)	1
ACCESSORIES			
#88	910-258-0	Joint Cable Assembly	1
#89	939-090-0	Allen Wrench (1.5)	1
#90	940-114-0	Air Hose Nipple (NPT1/4×3/8)	1
#91	916-810-0	(W) Bit (No. 2×75) for UA50DMC	1
#92	909-749-0	Solenoid Valve Assembly	1
#93	910-263-0	Sensor Cable Assembly (3F5)	1
#94	910-633-0	Connector Cover	1

When ordering spare parts, please specify tool type, code number and parts name.

Printed in Japan

PRINTED WITH SOY INK

URYU SEISAKU, LTD. Osaka, Japan

For further information, please contact at any time your nearest URYU distributor.

OKA-537-15-04-15-PDF