URYU G SERIES NUTRUNNER SYSTEM

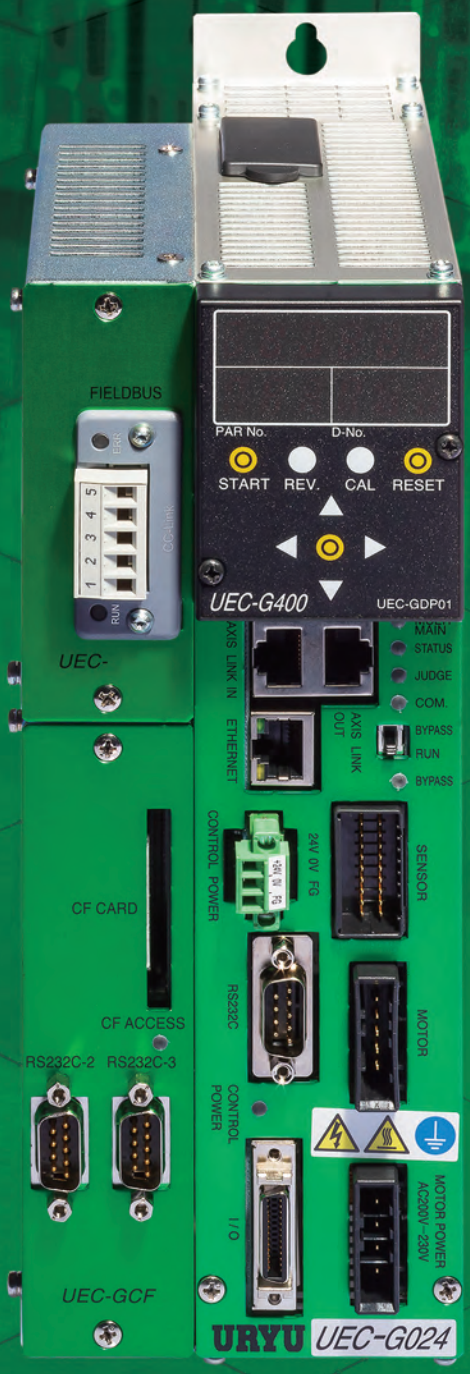

URYU SEISAKU, LTD.
Osaka, Japan

G SERIES
NUTRUNNER SYSTEM

High speed communication

High speed processing

EXTENSION UNIT

EXTENSION UNIT 1
UEC-GCC, UEC-GDN, UEC-GPB,
UEC-GPN, UEC-GEN, UEC-GIO

①Fieldbus Connector loading slot
Equipment slot
- CC-Link Ver2.00
- DeviceNet
- PROFIBUS DP-V1
- Ethernet/IP
- PROFINET IO

②Extension D-I/O Connector
INPUT : 32ch / OUTPUT : 32ch

EXTENSION UNIT 2
UEC-GCF

③CF Card slot

④CF ACCESS LED

⑤Extension RS232C Connector

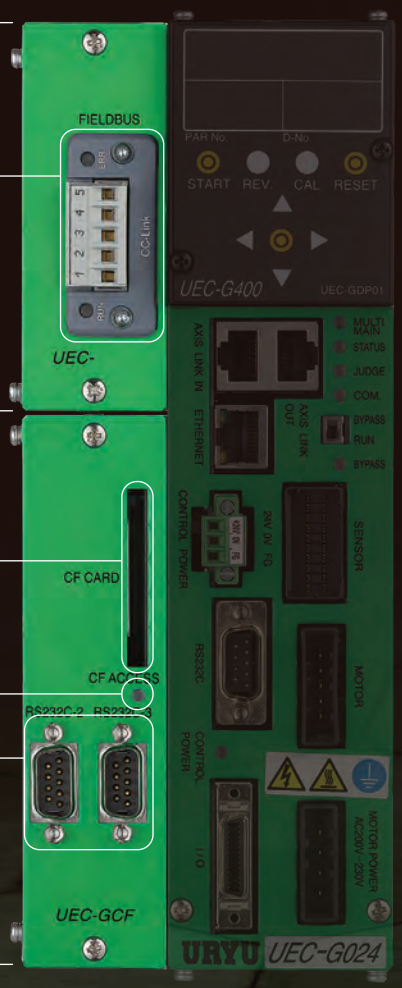

FUNCTIONS OF EXTENSION UNIT

①FIELDBUS connector loading slot	Connect external controller' s connector.
②Extension D-I/O connector	Connect IN and OUT signals from outside.
③CF Card slot	Insert CompactFlash (CF) card.
④CF ACCESS LED	Indicate CF card status by changing LED color.
⑤Extension RS232C Connector	Output fastening result and input ID data.

Communication speed with PC is increased rapidly.

1/5 Communication speed

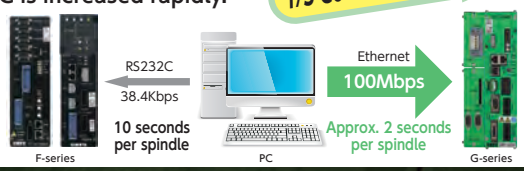

Chip installed G-Tool manages fastening data.

Serial number, fastening number, error and repair histories are managed. G-tool manages these data, you can use them to control repair and replacement period of G elements.

A variety of network communication.

- Not only CC-LINK, DeviceNet, Profibus but also Ethernet/IP, PROFINET to be main network communication in future are prepared.
- It performs communication of data to your fastening control system.

PROFINET

PROFIBUS PROCESS FIELD BUS

EtherNet/IP

DeviceNet CONFORMANCE TESTED

CC-Link

High speed fastening

G-Unit FRONT PANEL

G-Unit
UEC-G024

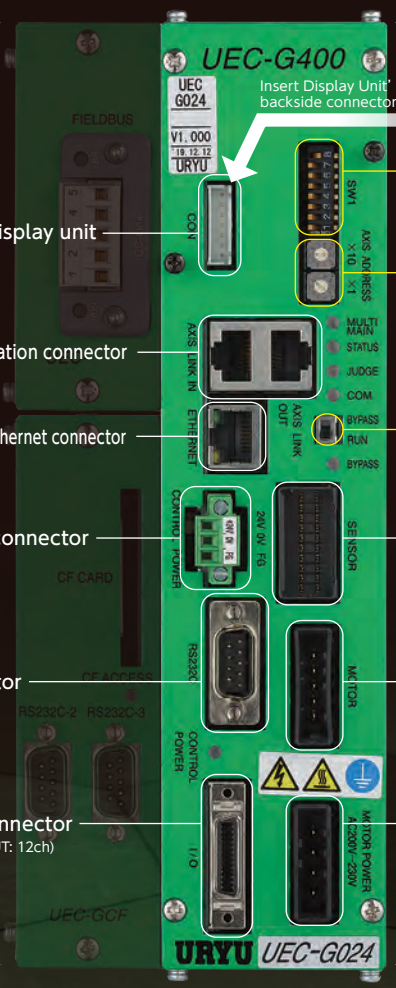

Display Unit
UEC-GDP01

You may confirm fastening result and setting of a parameter by equipping the Display Unit on G-Unit.

G-Unit FRONT PANEL ITEMS

①Display unit connector	
②Spindle communication connector	This is G-Unit to G-Unit communication port.
③PC connector	This is PC connectiong port.
④Controlled power connector	Connect 24V control power.
⑤RS232C connector	Fastening result data output
⑥Standard I/O connector	Send and receive IN and OUT signals from outside.
⑦G-Tool connector	Connect G-Tool cable
⑧Drive power connector	Connect drive power AC200~230V(±10%) 50/60Hz
Ⓐ Special function SW1 switch	Set special function relating to fastening.
Ⓑ Spindle number switch	Give spindle number to G-Unit
Ⓒ RUN/BYPASS switch	Change G-Unit status RUN: Nutrunner operative BYPASS: Nutrunner inoperative

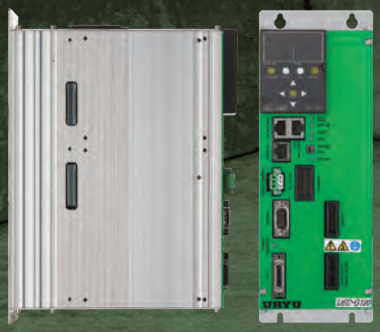

Attention

[Attention]
Securely install and fix the G-Unit firmly to prevent personal injury, malfunction and drop caused by vibration and so on.

G-control syetem
Configulation

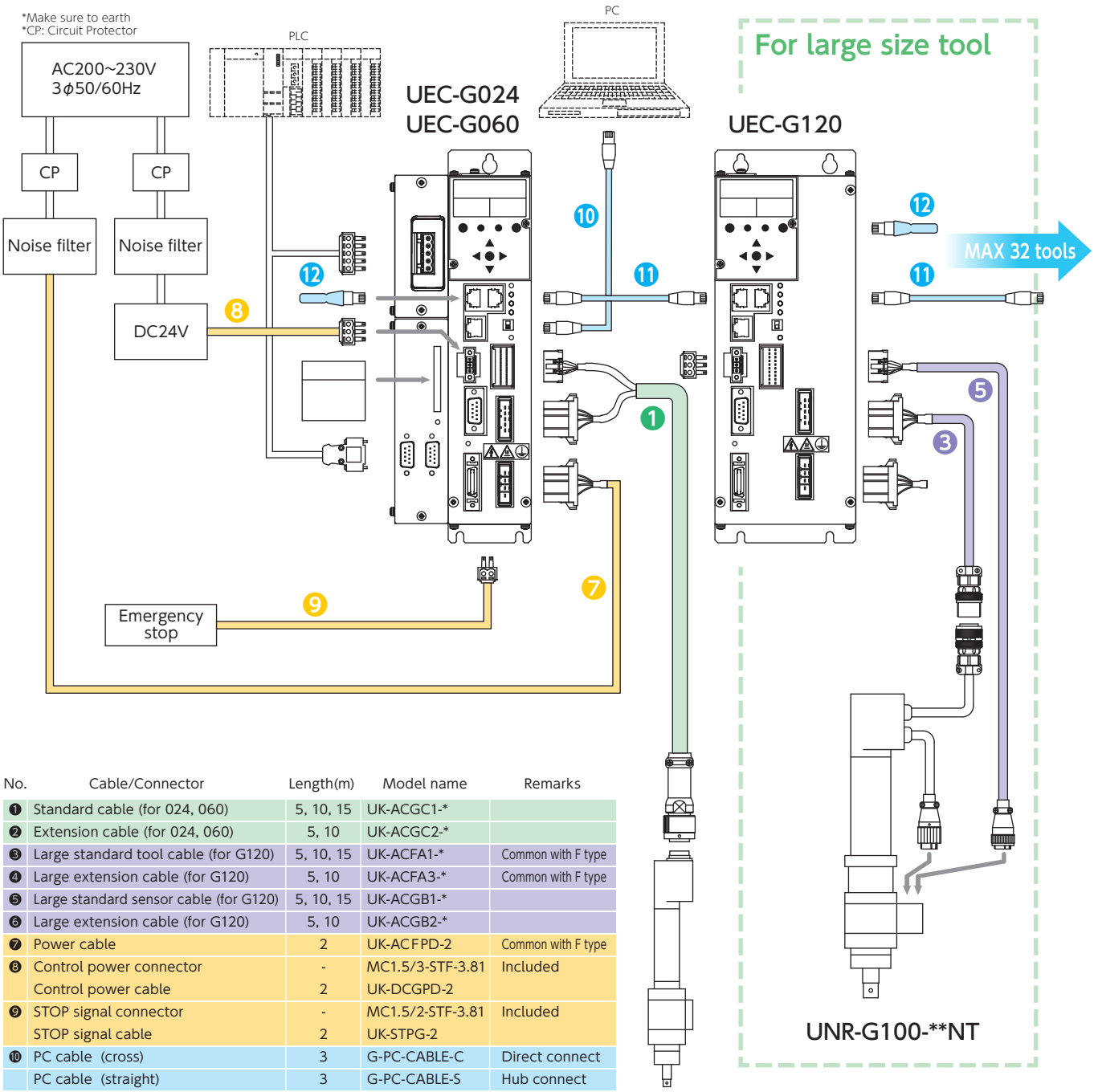

No.	Cable/Connector	Length(m)	Model name	Remarks
❶	Standard cable (for 024, 060)	5, 10, 15	UK-ACGC1-*	
❷	Extension cable (for 024, 060)	5, 10	UK-ACGC2-*	
❸	Large standard tool cable (for G120)	5, 10, 15	UK-ACFA1-*	Common with F type
❹	Large extension cable (for G120)	5, 10	UK-ACFA3-*	Common with F type
❺	Large standard sensor cable (for G120)	5, 10, 15	UK-ACGB1-*	
❻	Large extension cable (for G120)	5, 10	UK-ACGB2-*	
❼	Power cable	2	UK-ACFPD-2	Common with F type
❽	Control power connector	-	MC1.5/3-STF-3.81	Included
	Control power cable	2	UK-DCGPD-2	
❾	STOP signal connector	-	MC1.5/2-STF-3.81	Included
	STOP signal cable	2	UK-STPG-2	
❿	PC cable (cross)	3	G-PC-CABLE-C	Direct connect
	PC cable (straight)	3	G-PC-CABLE-S	Hub connect
⓫	Spindle Cable	0.2	F-SPINDLE-CABLE	Common with F type
⓬	Terminal Resistance	-	G-END	

*Please ask us when you require another length cable excepting the above.

User Console

G SERIES NUTRUNNER SYSTEM

G-Console provides you a suitable fastening and satisfy variety of fastening patterns.

- Parameter editing is possible on tabular screen.
- G-Console displays fastening result data and torque curve waveform.
- G-Console saves every data in a file and print out the same.
- G-Console saves and prints out fastening result data and torque curve file.
- G-Console reads, writes and verifies every setting value.
- G-Console communicates with up to 32 G-Units at the same time.
- G-Console makes wide variety of fastening MODE setting and ID code input (RS232C).
- Available up to 24 different each work settings and 96 fastening parameter settings.

MODE setting

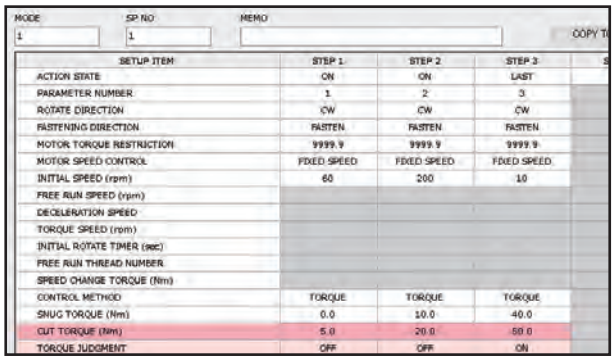

SETUP ITEM	STEP 1	STEP 2	STEP 3
ACTION STATE	ON	ON	LAST
PARAMETER NUMBER	1	2	3
ROTATE DIRECTION	CW	CW	CW
FASTENING DIRECTION	FASTEN	FASTEN	FASTEN
MOTOR TORQUE RESTRICTION	9999.9	9999.9	9999.9
MOTOR SPEED CONTROL	FIXED SPEED	FIXED SPEED	FIXED SPEED
INITIAL SPEED (rpm)	60	200	10
FREE RUN SPEED (rpm)			
DECELERATION SPEED			
TORQUE SPEED (rpm)			
INITIAL ROTATE TIMER (sec)			
FREE RUN THREAD NUMBER			
SPEED CHANGE TORQUE (Nm)			
CONTROL METHOD	TORQUE	TORQUE	TORQUE
SNUG TORQUE (Nm)	0.0	10.0	40.0
CUT TORQUE (Nm)	5.0	20.0	50.0
TORQUE JUDGMENT	OFF	OFF	ON

1) TORQUE METHOD
2) ANGLE METHOD
3) YIELD METHOD
4) PIN-HOLE CONTROL
5) POSITION ADJUST
6) PRE-LOAD
7) IDLE CHECK

Fastening Result History

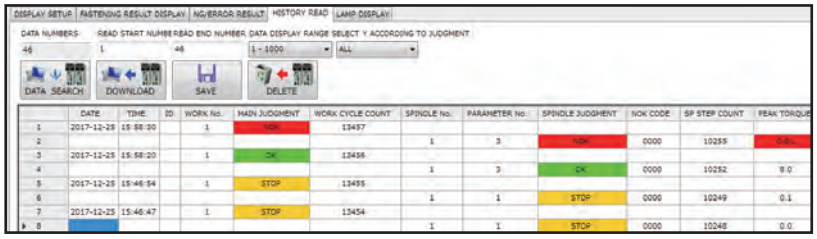

G-Tool information

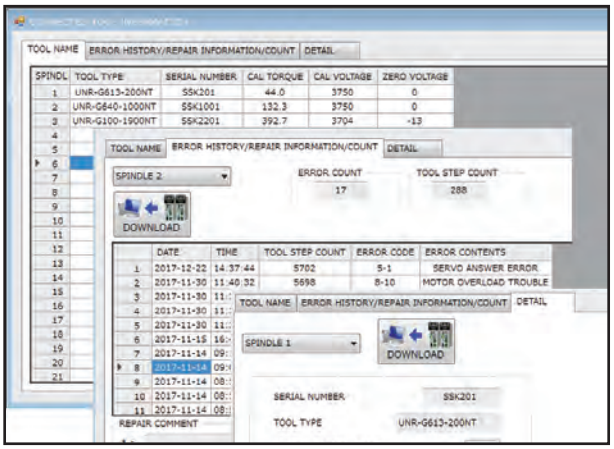

Waveform monitor

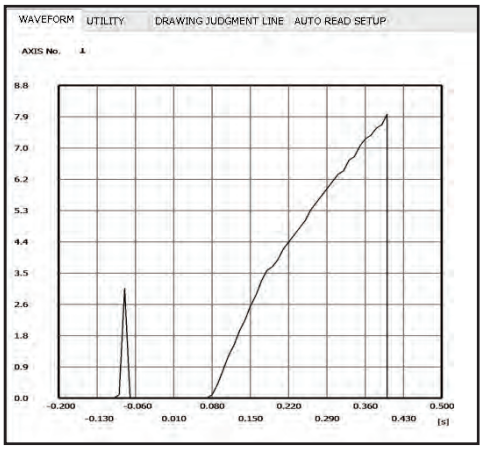

G-Unit
Specifications

Outline of UEC-G-024, 060 (mm)

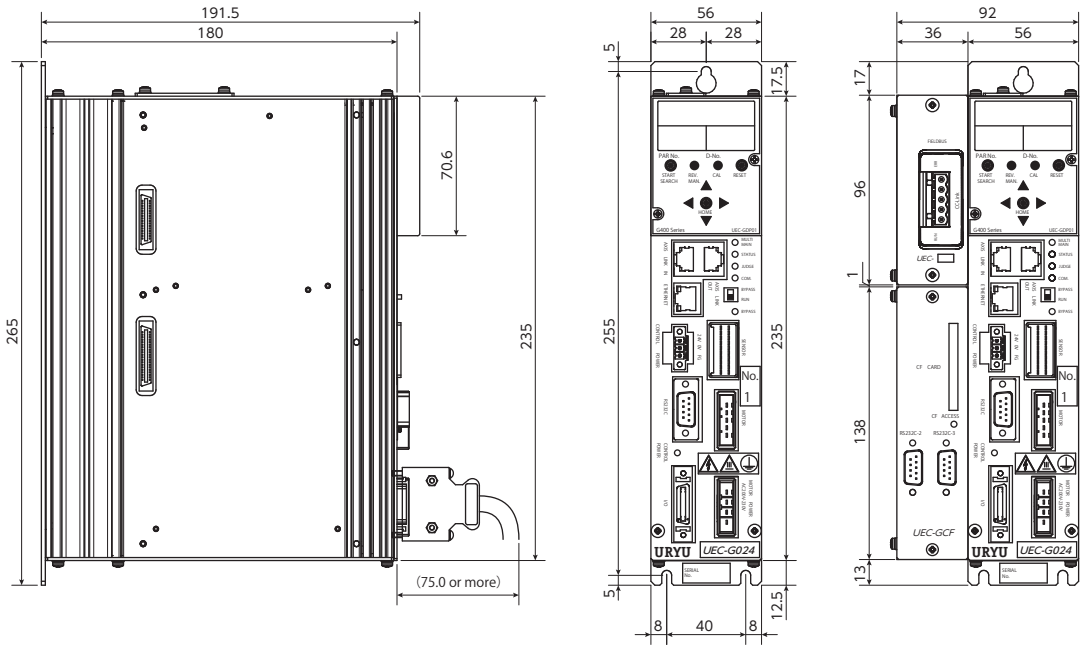

Outline of UEC-G120 (mm)

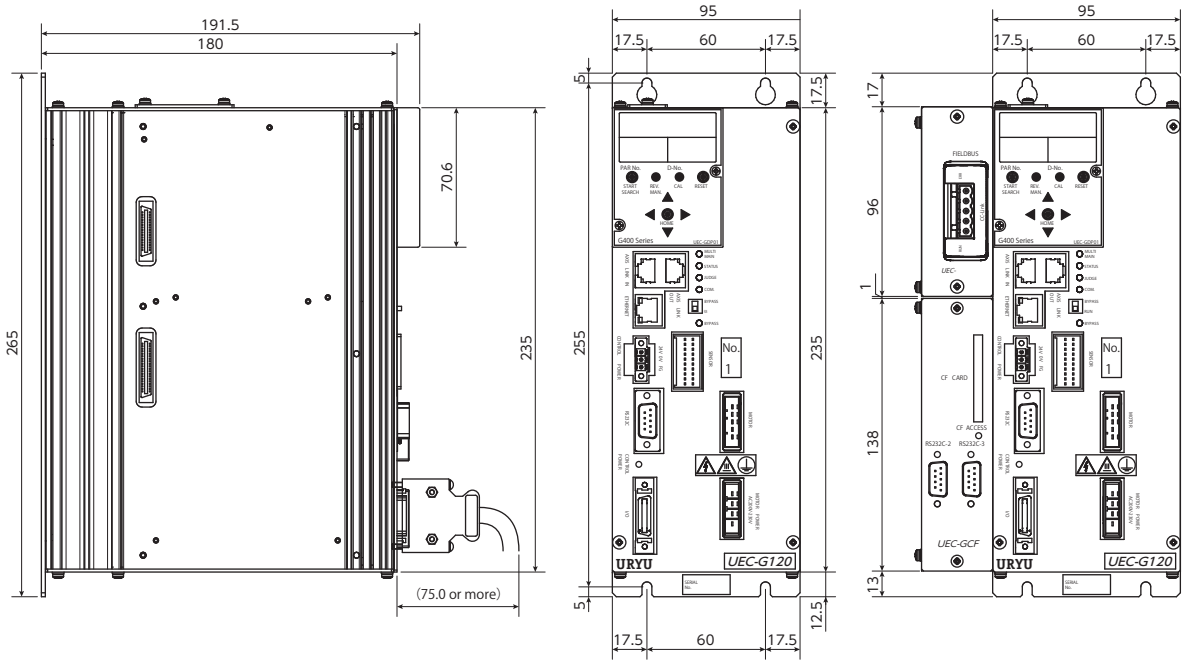

Comparison between F-series and G-series

G-system realizes greater space saving in control box by eliminating main unit.

Layout of F-series system (mm)

F-series main unit + F024H 10 sets

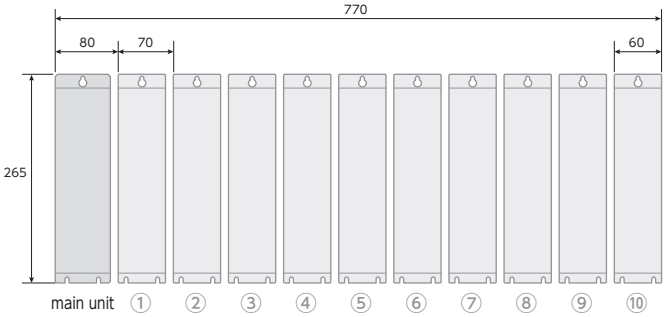

F-series main unit + F120H 7sets

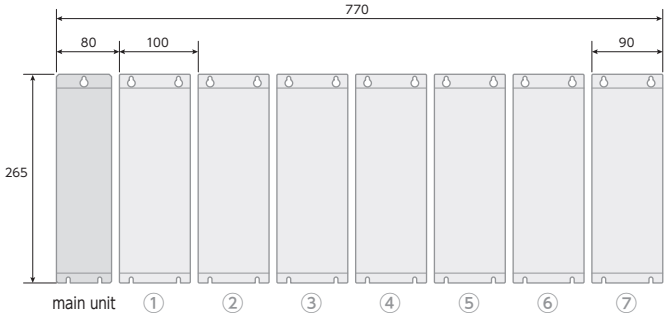

F-series main unit + F060H 10 sets

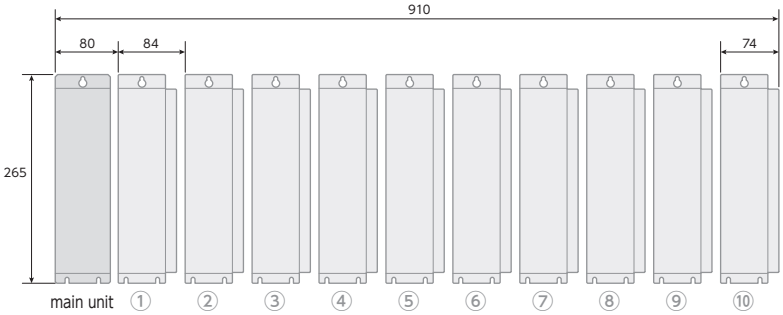

Layout of G-series system (mm)

G-series extension unit + G024(G060) 10 sets

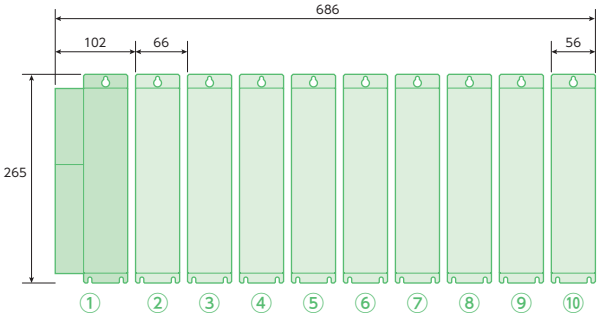

G-series extension unit + G120 7 sets

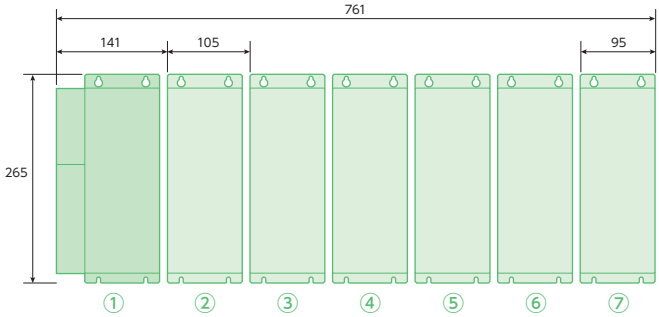

Specifications of G-Tools
Standard straight type

UNR-G613-400NT

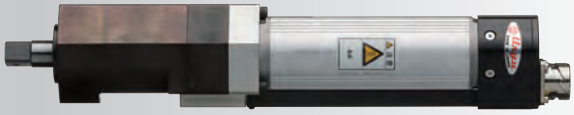

UNR-G640-1300NT

(a)
G613/ G640

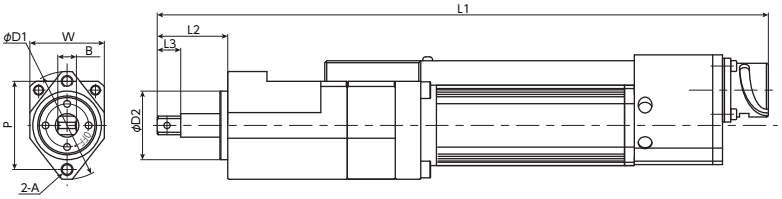

(b)
G100

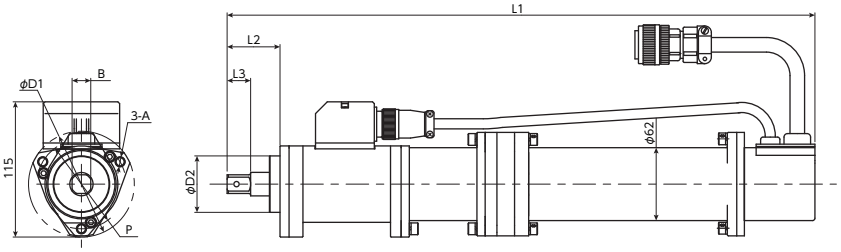

Dimensions

(mm)

Type	External dimensions (mm)									Fixing plate thickness	Motor type	Torque sensor	Flange design
	L1	L2	L3	W	ϕD1	ϕD2	P	A	B				
UNR-G613-50NT	288	36	12	38	55	35	45	M6	9.5Sq	9.0以上	G613	Built-in the motor	**(a)**
UNR-G613-100NT													
UNR-G613-200NT	312												
UNR-G613-300NT													
UNR-G613-400NT													
UNR-G640-800NT	419	40	20	51	73	44	59	M8	15.88Sq		G640		
UNR-G640-1000NT													
UNR-G640-1300NT													
UNR-G100-1900NT	516	45		115	90	48	ϕ76			12.0以上	G100		**(b)**
UNR-G100-2500NT													
UNR-G100-3700NT	570	57	30	120.5	94	58		M10	19.0Sq				
UNR-G100-5400NT	654	80	40	150.5	128	70	ϕ90		25.4Sq				
UNR-G100-7000NT													
UNR-G100-10000NT													

Torque sensor specifications

Type	Capacity (Nm)
10N	9
40N	34
130N	105
250N	195
370N	280
700N	540
1000N	800

Rated strain Output voltage Non-lineality	1000×10−6 0.5mV/V 0.5%R.O.
Influence on zero point due to temperature	0.025%R.O./℃
Temperature rating Input output resistance Maximum input voltage Insulation resistance Overload capacity	-10～+65℃ 350Ω Max.16V 300MΩ以上 150%R.O.

Specifications	Type	Max. Torque (Nm)	Max. Torque (ft-lbs)	Free Speed (rpm)	Weight (kg)	Weight (lb)	Spindle unit
Small size	**UNR-G613-50NT**	5	3.7	5350	1.32	2.91	**UEC–G024**
	UNR-G613-100NT	10	7.4	3000	1.32	2.91	
	UNR-G613-200NT	20	14.8	1220	1.55	3.42	
	UNR-G613-300NT	30	22.2	860	1.55	3.42	
	UNR-G613-400NT	40	29.6	640	1.55	3.42	
Medium size	**UNR-G640-800NT**	80	59.2	940	4.0	8.82	**UEC–G060**
	UNR-G640-1000NT	100	74.0	760	4.0	8.82	
	UNR-G640-1300NT	130	96.2	560	4.0	8.82	
Large size	**UNR-G100-1900NT**	190	140.6	720	8.4	18.52	**UEC–G120**
	UNR-G100-2500NT	250	185.0	530	8.7	19.18	
	UNR-G100-3700NT	370	273.8	370	10.2	22.49	
	UNR-G100-5400NT	540	399.6	250	16.0	35.27	
	UNR-G100-7000NT	700	518.0	170	16.0	35.27	
	UNR-G100-10000NT	1000	740.0	130	16.0	35.27	

G-Tools minimum pitch circle

Refer to minimum pitch circle for your machine designing.

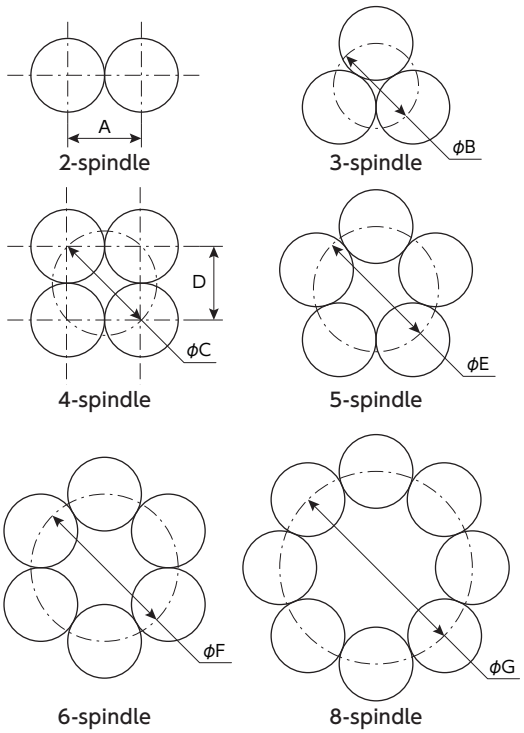

(mm)

Type	A	ϕB	ϕC	D	ϕE	ϕF	ϕG
UNR-G613-50NT	39	49	61	44	67	80	104
UNR-G613-100NT							
UNR-G613-200NT							
UNR-G613-300NT							
UNR-G613-400NT							
UNR-G640-800NT	52	65	81	58	89	107	138
UNR-G640-1000NT							
UNR-G640-1300NT							
UNR-G100-1900NT	69	85	105	75	115	132	174
UNR-G100-2500NT							
UNR-G100-3700NT	76	100	110	78	120	140	184
UNR-G100-5400NT	94	125	143	102	166	188	257
UNR-G100-7000NT							
UNR-G100-10000NT							

G-Tool Wiring and Installation

Cable Wiring

1. Tag every item with a label or plate showing spindle number for multiple G-Tools whatever the item is connected with.
2. Connect power cable from G-Tool with right Spindle number-labeled G-Unit.
3. Make cable arrangement so cable suffer no stress when G-Tools travel in machine structure.
4. Fix cable by cable ties in the way allowing no load to cable connecting part. Pay attention not to fasten cables to G-Tool too tight.

Make cable arrangement and installing G-Tools not to apply tension by pulling a cable to G-Tool, it causes an error on torque detection.

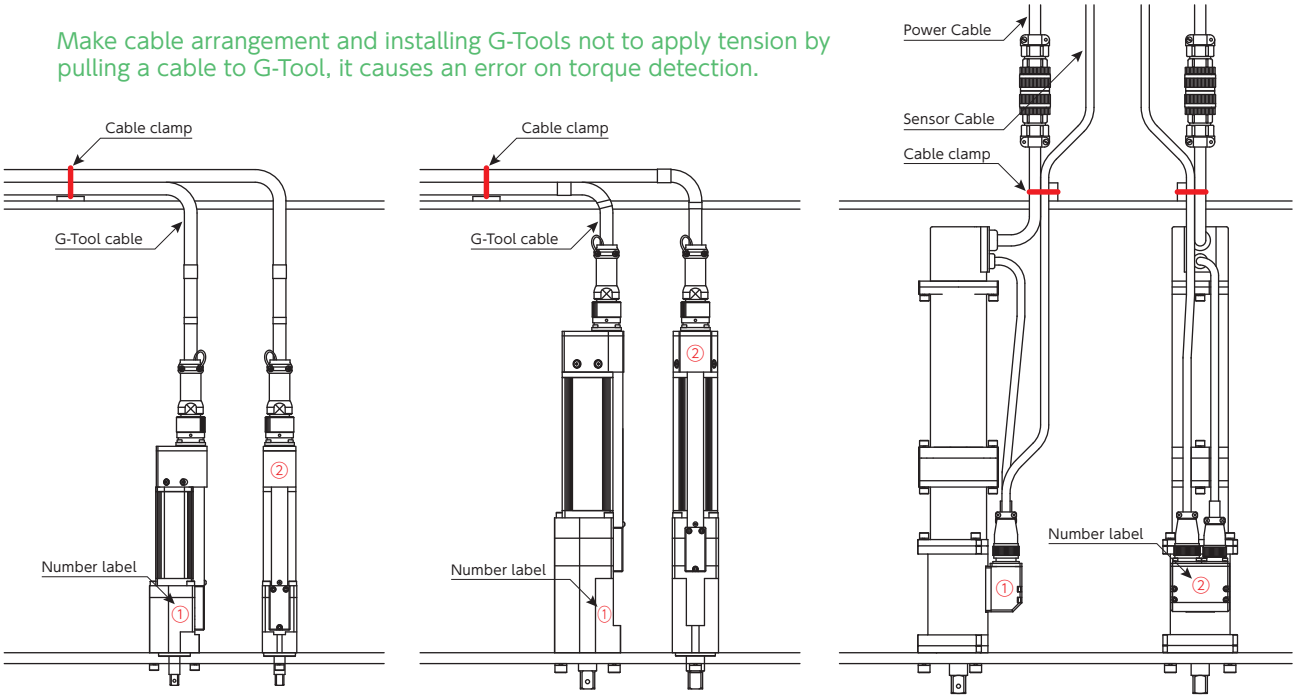

〈CAUTIONS FOR WIRING〉

It is recommended to put movable part of cables in flexible tube or in cableveyor (a combination term made of cable and conveyor). Pay attention to the following points for wiring to avoid disconnection or wire cut.

- Make separate bundles so each may have a few cables instead of less bundles having many cable to make its own weight light and to avoid stress at folding points.
- Make cable arrangement so it may keep distance from edge or corner part of hard parts or structure even if cables are not movable.

G-Tool Wiring and Installation

Cable Wiring

1. Tag every item with a label or plate showing spindle number for multiple G-Tools whatever the item is connected with.
2. Connect power cable from G-Tool with right Spindle number-labeled G-Unit.
3. Make cable arrangement so cable suffer no stress when G-Tools travel in machine structure.
4. Fix cable by cable ties in the way allowing no load to cable connecting part. Pay attention not to fasten cables to G-Tool too tight.

Make cable arrangement and installing G-Tools not to apply tension by pulling a cable to G-Tool, it causes an error on torque detection.

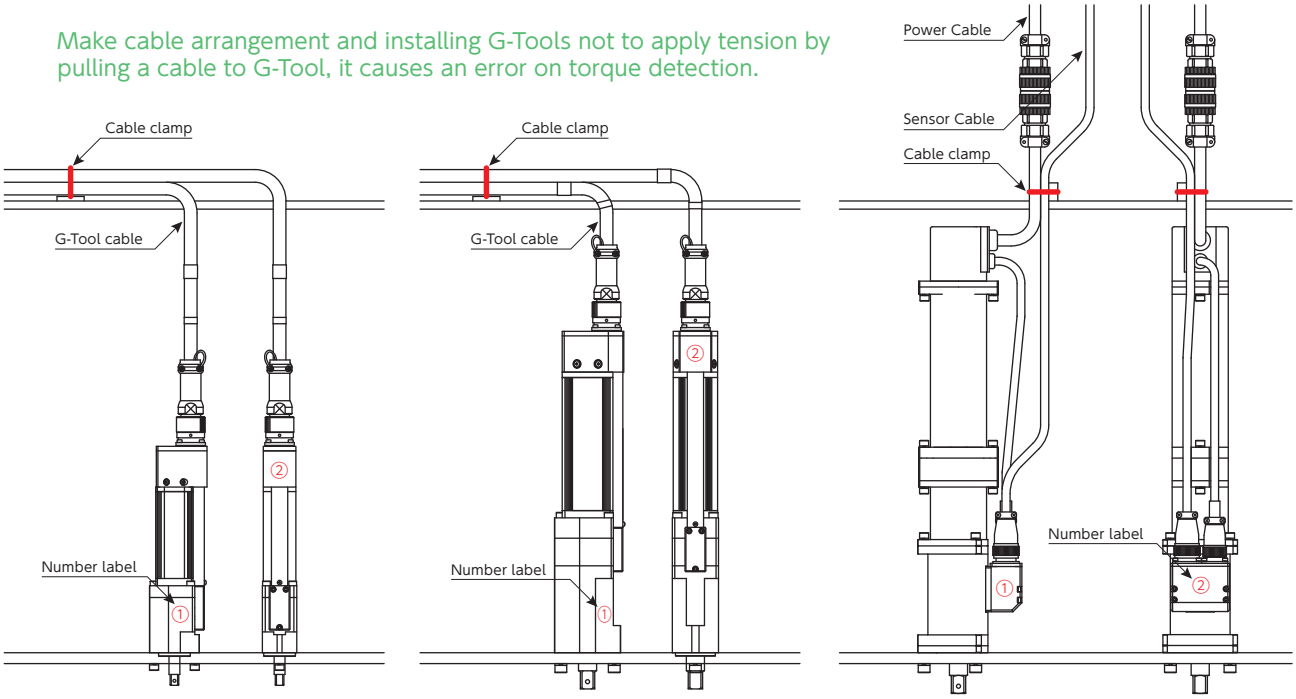

〈CAUTIONS FOR WIRING〉

It is recommended to put movable part of cables in flexible tube or in cableveyor (a combination term made of cable and conveyor). Pay attention to the following points for wiring to avoid disconnection or wire cut.

- Make separate bundles so each may have a few cables instead of less bundles having many cable to make its own weight light and to avoid stress at folding points.
- Make cable arrangement so it may keep distance from edge or corner part of hard parts or structure even if cables are not movable.

URYU SEISAKU, LTD.

P.O.Box 7, Higashinari, Osaka, Japan.
Tel: 816-6973-9414~9415
Fax: +816-6972-0346
E-mail: uryuair@uryu.co.jp

Subject to change without notice.

NU-2022-02-DI05